November 2020

VXLAN on CX 8400 and 8360 Switches

Daryl Wan
Satheesh Kumar
Pramod Kumar A S
Matthew Finlay

aruba
a Hewlett Packard Enterprise company

Agenda: 8360/8400 VXLAN

1. Overview
2. Use Cases
3. Details/Caveats
4. Configuration and Best Practices
5. Troubleshooting
6. Resources
7. Demo

Overview

aruba
a Hewlett Packard
Enterprise company

8360/8400 VXLAN Overview

- 10.5 provides VXLAN EVPN support for 6300/6400/8325 and EVPN support for 8400
- 10.6 adds support for VXLAN EVPN on 8360/8400

- 8360 is targeted for core and aggregation layer of campuses, as well as Data Center (DC) leaf and compact spine requirements

- 8400 is targeted for campus/DC core or large scale border router requirements

Use Cases

aruba
a Hewlett Packard
Enterprise company

DC Use Case

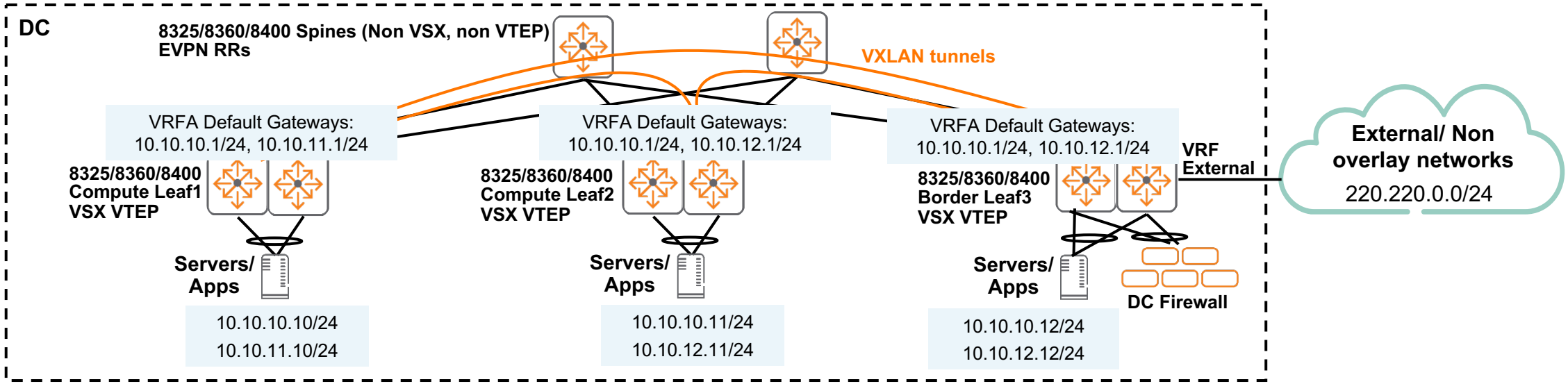

- Distributed L3 gateways (symmetric IRB) recommended for DC
- Before 10.6
  - 8325 recommended as both compute & border leaf/VTEP
  - 8325/8400 recommended as EVPN RR spine
- From 10.6
  - 8360/8400 can be used as both compute & border leaf/VTEP
  - 8360 can be used as EVPN RR compact spine

Campus/Edge DC Use Case

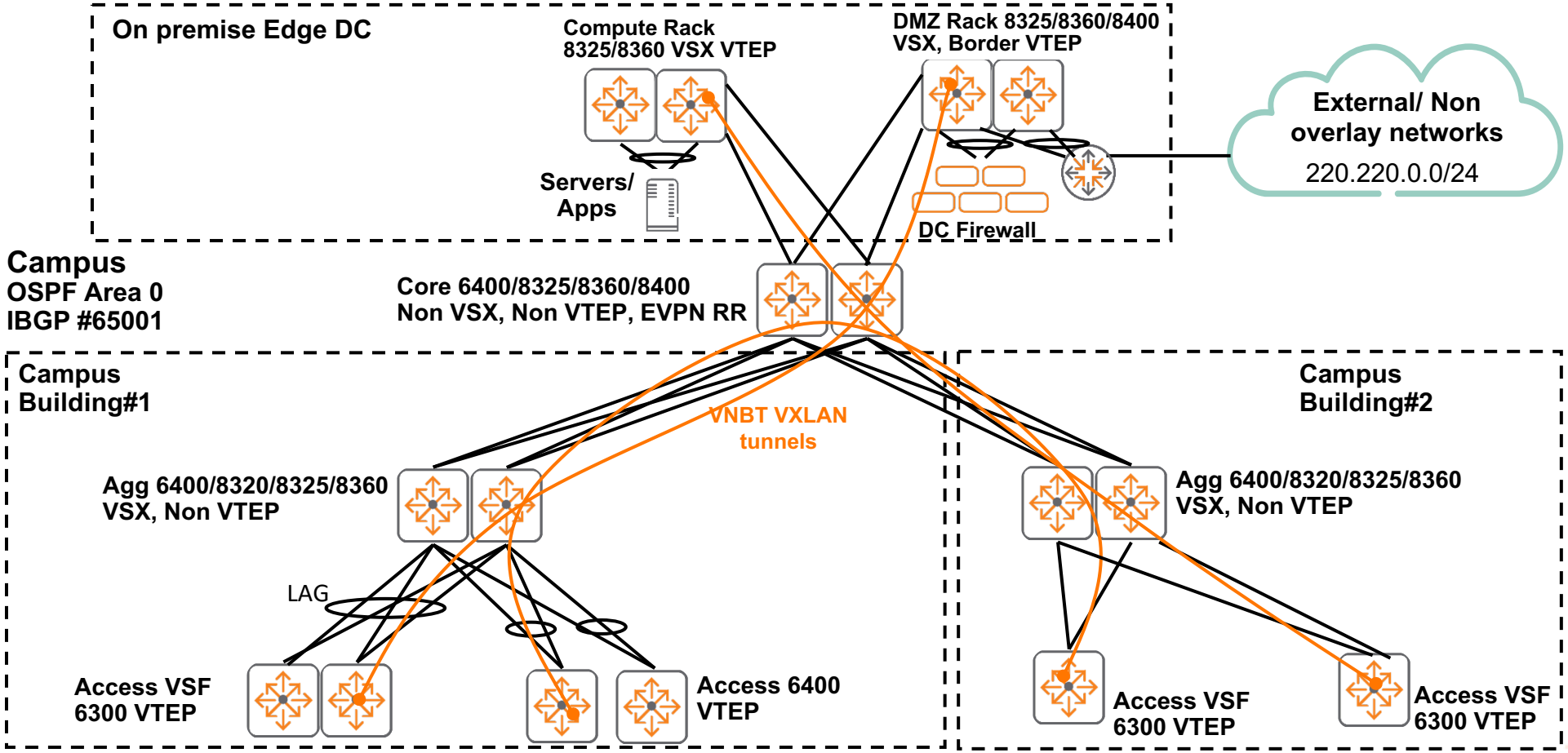

- Distributed L3 gateways (symmetric IRB) recommended for Campus
- Before 10.6
  - 8325 recommended as both compute & border VTEP in edge DC
  - 8325/8400 recommended as EVPN RR campus core
- From 10.6
  - 8360 can be used as VSX compute VTEP in edge DC or EVPN RR (compact campus core)
  - 8360/8400 can be used as VSX border VTEP
  - 8360 also suitable as non VTEP Campus Agg switches or compact Core switch

AOS-CX 10.6 VXLAN EVPN Scale*

Switch Model	6300	6400	8325	8360	8400
MAC	32,768	32,768	98,304	114,688	768,000
IPv4 Host Table (ARP)	49,152	49,152	120,000	163,840	756,000
IPv6 Host Table (ND)	49,152	49,152	52,000	163,840	524,000
IPv4 Unicast Routes	61,000	61,000	131,072	1,048,576	1,011,712
BGP Peers	256	256	256	256	256
EVPN VXLAN VTEP Peers (Number of Tunnels)	256	256	1024	1,024	1,024
EVPN VXLAN L2 VNI (VLANs)	1,024	1,024	4,039 (VLAN 1 not supported)	4,093	4,093

** Refer to data sheet after 10.6 GA for final confirmed numbers*

Details

aruba
a Hewlett Packard
Enterprise company

8360 VXLAN EVPN Details

8360 Scale

- VNI – 4093
- VTEP – 1024
- L3VNI – 255
- Overlay Hosts – 110K

- Above values are per switch and not shown in datasheet
- Refer to AOS-CX TFM for final confirmed numbers

8400 VXLAN EVPN Details

8400 Scale

- VNI – 4093
- VTEP – 1024
- L3VNI – 255
- Overlay Hosts – 54K

- Above values are per switch and not shown in datasheet
- Refer to AOS-CX TFM for final confirmed numbers

8400 VXLAN EVPN Caveats

Caveats	Comments
DSCP value is not copied from inner header to outer header when encapsulated over VXLAN • 8400 as core/agg switch will not prioritize traffic in VXLAN tunnels correctly	Planned to be fixed in the future release.
GRE tunnels are not supported on JL687A (25G LCs) due to VXLAN enablement	Planned to be fixed in the future release.

** Refer to 10.6 release notes for final list of caveats*

Configuration

aruba
a Hewlett Packard
Enterprise company

VXLAN EVPN Distributed L3 Gateway Configuration

- Refer to https://community.arubanetworks.com/t5/Data-Center-Networking-Solutions/AOS-CX-VXLAN-EVPN-Symmetric-IRB-Distributed-L3-Gateways/ta-p/664764
- Above 10.5 configs documented also applicable to 8360/8400

- **In future 10.6 CPE**, the same SVI/AG IP will be supported for distributed L3 gateways with IPv4 unicast

```
interface vlan11
    vrf attach VRF1
    ip address 10.1.11.1/24
    active-gateway ip mac 12:00:00:00:01:00
    active-gateway ip 10.1.11.1
```

Best Practices

aruba
a Hewlett Packard Enterprise company

VXLAN EVPN Distributed L3 Gateway Best Practices

- Refer to https://community.arubanetworks.com/t5/Data-Center-Networking-Solutions/AOS-CX-VXLAN-EVPN-Symmetric-IRB-Distributed-L3-Gateways/ta-p/664764
- Above 10.5 recommendations also applicable to 8360/8400

- 8400
  - Use route/subnet redistribution instead of host redistribution as applicable based on host scale

Troubleshooting

aruba
a Hewlett Packard
Enterprise company

VXLAN EVPN Distributed L3 Gateway Verification

- Refer to https://community.arubanetworks.com/t5/Data-Center-Networking-Solutions/AOS-CX-VXLAN-EVPN-Symmetric-IRB-Distributed-L3-Gateways/ta-p/664764
- Above 10.5 verification commands documented also applicable to 8360/8400

- Check Tunnels are operational - “show interface vxlan vteps”
  - If not, check OSPF/BGP peers are established – “show bgp all-vrf all summary”
  - EVPN is advertising and receiving VPN info from peers – “show bgp l2vpn evpn”
  - Check spine / remote VTEP-peer has the neighbor and EVPN configuration to share routes and l2vpn

- Check VNI is operational - “show interface vxlan vni”
  - If not, check EVPN is advertising and receiving VPN info – “show bgp l2vpn evpn”

- Check if the host/route is learnt on the VXLAN as applicable – “show ip route bgp all-vrfs”
  - If not, check route or host redistribute configuration on the EVPN configuration
  - Check EVPN is advertising and receiving VPN info for the VNI.
  - Check if the host or next hop over VXLAN are learnt – “show arp all-vrf” or “show ipv6 neighbors all-vrfs” as applicable.

8400 VXLAN EVPN Troubleshooting Specifics

- VXLAN info available through diagdump's and support files "**diag-dump vxlan basic"**
  - Diagdump MM – support file path: feature/vxlan/diagdump.txt
    - Shows VXLAN info in AOS-CX (Tunnels/Routes/VPN PI data)
    - Shows VXLAN 8400 platform info (overlay_*)
    - Shows counter info for the internal logic (OVERLAY: Non-Zero [Error/Warn/Info/Debug] Counters)

  - Diagdump LC – support file path: ./diag_dump_vxlan.txt ""**diag-dump vxlan basic module <LC>"**
    - Shows VXLAN info in LC CPU (section - CACHE_FULL_DUMP_BEGIN/…_END)
    - Shows VXLAN info programmed in the AISC (section - ASIC_DUMP_FULL_BEGIN/…_END)
    - Shows counter info for the internal logic (OVERLAY: Non-Zero [Error/Warn/Info/Debug] Counters)

- Check L3PD programming for host and routes for overlay hosts and routes in diag dump output.
- Check VXLAN counters "show int vxlan 1 statistics"

8400 VXLAN EVPN Troubleshooting Specifics

Diagdump MM

```
MM:
overlay_vpn_s information
  Cache Entries: 3
VPN*     VNI         VRF-NAME          VRF     VLAN     MC-ID  IS-L3VNI  HA-STATE
-------  ----------  ----------------  ------  -------  -----  --------  --------
10       10010       VRF1              4       10       10     false     normal
11       10011       VRF1              4       11       11     false     normal
10240    100001      VRF1              4       10240    10240  true      normal
```

Diagdump LC

```
LC CPU:
VPN AGENT:
overlay_vpn_s information
  Cache Entries: 3
VPN*     VNI         VRF-NAME          VRF     VLAN     MC-ID  IS-L3VNI  HA-STATE
-------  ----------  ----------------  ------  -------  -----  --------  --------
10       10010       VRF1              4       10       10     false     normal
11       10011       VRF1              4       11       11     false     normal
10240    100001      VRF1              4       10240    10240  true      normal
```

```
LC ASIC:
HW VPNs:
VPN      VNI
------   --------
10       10010
11       10011
10240    100001
```

8400 VXLAN EVPN Troubleshooting Specifics

```
show int vxlan 1 statistics
-----------------------------------------------------------------------------------------------------------------------------------------------------------------------------------------------------------------------
-----------------------------------------------------------------------------------------------------------------------------
Interface                        RX Bytes          RX Packets            RX Drops            TX Bytes          TX Packets            TX Drops        RX Broadcast
RX Multicast        TX Broadcast        TX Multicast            RX Pause            TX Pause
-----------------------------------------------------------------------------------------------------------------------------------------------------------------------------------------------------------------------
-----------------------------------------------------------------------------------------------------------------------------
vxlan1                           1351626                9015                   0              591570                4553                   0                   0
0                   0                   0
```

8360 VXLAN EVPN Troubleshooting Specifics

- Show commands for vxlan tunnels
  - **show interface vxlan**
  - **show interface vxlan vteps**
  - **show interface vxlan vni**
  - **show interface vxlan 1 statistics**

- PI Commands for VXLAN tunnels
  - Captured in the Wiki link

- Command to collect debug information for vxlan tunnels is "**diag-dump vxlan basic"**
  - Sample display captured in the Wiki link
  - Shows VXLAN info in AOS-CX (Tunnels/Routes/VPN PI hmap)
  - The 8360 Tunnel, VPN Platform information in the MM and LC are captured
  - The Plugin cache(MM), Agent Cache(LC) and the ASIC(LC) dumps are displayed under "***PLUGIN CACHE DUMP BEGIN*" ,** **"*AGENT CACHE DUMP BEGIN*** " and "***ASIC DUMP BEGIN"*** in the ***diag dump vxlan basic*** command

- VXLAN info available through diagdump's in feature/vxlan/diagdump.txt in support-files

8360 VXLAN EVPN Troubleshooting Specifics
Plugin Cache (on MM)

```
******** PLUGIN CACHE DUMP BEGIN *********
 VPN ENTRY
                                                *********
Vni id            Rep Grp Id        Vlan              MM State          Status
------            ----------        ----              --------          ------
20                34                200               Undef             False
100000            33                4101              Undef             False
10                32                100               Undef             False
```

```
                                                TUNNEL/ECMP/Nexthop CACHE
                                                *************************
Tunnel Index      Src IP            Dst IP            Internal Vlan     VRF               Ecmp Id           TTL               MTU
Udp Port          MM State          Tunnel Status     Vlan Conf
       Ecmp Conf
------------      ------            ------            -------------     ---               -------           ---               ---
--------          --------          -------------     ---------
       ---------
1                 1.1.1.1           3.3.3.3           7167              2                 1                 255
9162              4789              Undef             Configured        False
       False

ECMP Id           Vlan id           L3 intf id        Log Port          Num of Nhops      Member State      Nexthop_Mac
Port Name         ISL Redirected
-------           -------           ----------        --------          ------------      ------------      -----------       ---
------         --------------
1                 4123              5                 16777508          1                 3                 90:20:C2:BA:B3:00
1/1/12            NA
.......................................................................................................................................
```

8360 VXLAN EVPN Troubleshooting Specifics Plugin Cache (on MM) Continued….

```
 NETVP CACHE
 ***********
Vni id            Tunnel id         MM State
------            ---------         --------
100000            1                 Undef
10                1                 Undef
==============================

******** PLUGIN CACHE DUMP END ********
```

8360 VXLAN EVPN Troubleshooting Specifics Agent Cache (on LC)

```
---------------------------------------------------------------------------
[Start] Daemon switchd_agent0
---------------------------------------------------------------------------
LC:                NODE ID:
----               ---------
2                  1
==============================

******** AGENT CACHE DUMP BEGIN *********
                                                    VPN ENTRY
                                                    *********
Vni id             Rep Grp Id        Vlan              MM State          Status
------             ----------        ----              --------          ------
20                 34                200               Undef             False
100000             33                4101              Undef             True
10                 32                100               Undef             True
```

8360 VXLAN EVPN Troubleshooting Specifics Agent Cache (on LC) continued..

```
 TUNNEL/ECMP/Nexthop CACHE
*************************
Tunnel Index      Src IP            Dst IP            Internal Vlan     VRF               Ecmp Id           TTL               MTU
Udp Port          MM State          Tunnel Status     Vlan Conf
       Ecmp Conf
------------      ------            ------            -------------     ---               -------           ---               ---
--------          --------          -------------     ---------
       ---------
1                 1.1.1.1           3.3.3.3           7167              2                 1                 255
9162              4789              Undef             Configured        True
       True

ECMP Id           Vlan id           L3 intf id        Log Port          Num of Nhops      Member State      Nexthop_Mac
Port Name         ISL Redirected
-------           -------           ----------        --------          ------------      ------------      -----------       ---
------         --------------
1                 4123              5                 16777508          1                 1                 90:20:C2:BA:B3:00
1/1/12            NA
.......................................................................................................................................
```

```
 NETVP CACHE
 ***********
Vni id            Tunnel id         MM State
------            ---------         --------
ni id            Tunnel id         MM State
[10/1726]
------            ---------         --------
100000            1                 Undef
10                1                 Undef
==============================

******** AGENT CACHE DUMP END ********
```

8360 VXLAN EVPN Troubleshooting Specifics
ASIC Dump (on LC)

```
******** ASIC DUMP BEGIN ********
                                                VPN ENTRY
                                                *********
Vni Id            Rep Grp Id        Dst Vlan          Tunnel Index      Use_Pkt_Dst_Vlan
------            ----------        --------          ------------      ----------------
100000            33                4101              1                 False
10                32                100               1                 False
```

```
==========================================================================================
                                                TUNNEL ENTRY
                                                ************
Tunnel Index      Status            Src IP            Dst IP            ECMP Id           MTU               TTL
Internal Vlan     Encap pkts        Encap bytes
------------      ------            ------            ------            -------           ---               ---               ---
----------     ----------        -----------
1                 Enabled           1.1.1.1           3.3.3.3           1                 9162              255
7167              1716              173436

                                                TUNNEL EXIT
                                                ***********
Tunnel Index      Status            Src IP            Decap Pkts        Decap Bytes
------------      ------            ------            ----------        -----------
1                 Enabled           3.3.3.3           1716              173436

                                                TUNNEL ECMP MEMBERS
                                                *******************
NFD ID            Local ASIC Port   Local Port Type   VLAN Number       Nexthop MAC
------            ---------------   ---------------   -----------       -----------
5  36                PHY               4123              90:20:C2:BA:B3:00
..........................................................................................................................
```

8360 VXLAN EVPN Troubleshooting Specifics ASIC Dump (on LC) continued

```
 NETVP ENTRY
***********
Vni_id            Vlan Num          Rep Grp Id        Ucast Ovrride     Mcast Overide     IP Mcast Overide  Bcast Overide
------            --------          ----------        -------------     -------------     ----------------  -------------
100000            4101              33                True              True              True              True

10                100               32                True              True              True              True


Available REP entries: 57342
==================================================================================================================================

******** ASIC DUMP END ********

-----------------------------------------------------------------------
[End] Daemon switchd_agent0
-----------------------------------------------------------------------
=======================================================================
[End] Feature vxlan
=======================================================================
```

8360 VXLAN EVPN Troubleshooting Specifics

- Show commands for vxlan tunnels
  - **show interface vxlan**
  - **show interface vxlan vteps**
  - **show interface vxlan vni**
  - **show interface vxlan 1 statistics**

- Commands to collect debug information for VXLAN tunnels in ”**diag-dump vxlan basic**”
  - Show VXLAN info in AOS-CX (Tunnels/Routes)
  - The 8360 Tunnel, VPN Platform information in the MM and LC are captured
  - The Plugin cache (MM), Agent cache (LC) and ASIC (LC) dumps are displayed under “**PLUGIN CACHE DUMP BEGIN**”, ”**AGENT CACHE DUMP BEGIN**” and “**ASIC DUMP BEGIN**” in this command’s output

- VXLAN info available through diagdump’s in feature/vxlan/diagdump.txt in support files

Demo

Demo – Distributed L3 Gateways with 8360/8400 VSX VTEPs

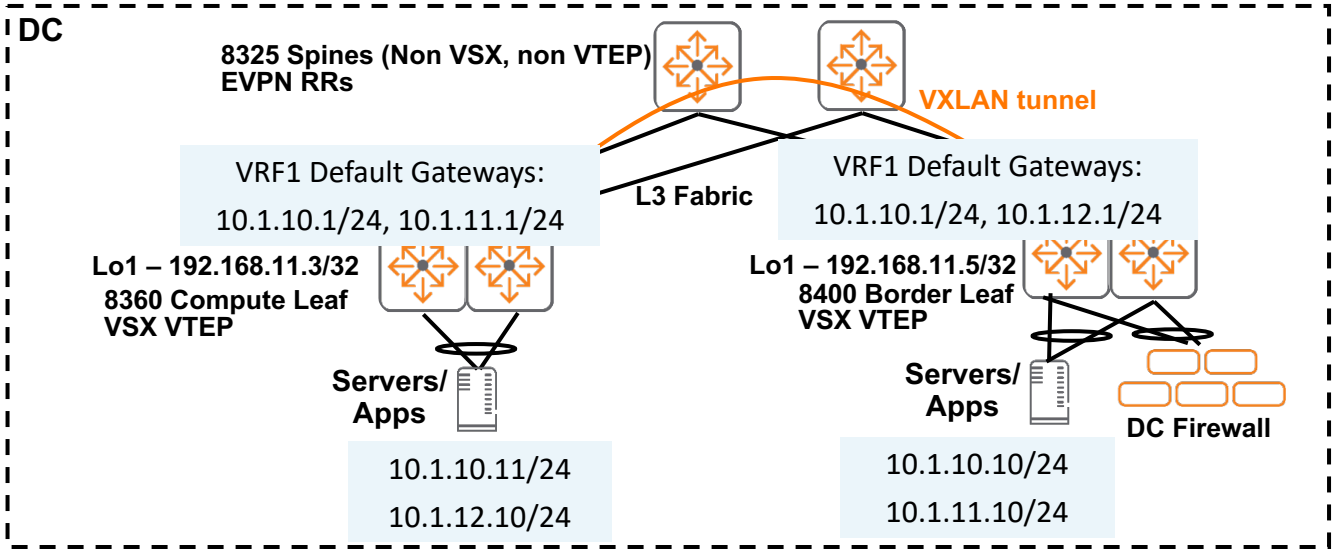

- Demo will show
  - VMs are able to communicate using both L2 VNI (same subnet), L3 VNI (different subnet)
  - Commands to help verify

Thank you

aruba
a Hewlett Packard
Enterprise company