LAB GUIDE

OSPFv3 Troubleshooting

IMPORTANT! THIS GUIDE ASSUMES THAT THE AOS-CX OVA HAS BEEN INSTALLED AND WORKS IN GNS3 OR EVE-NG. PLEASE REFER TO GNS3/EVE-NG INITIAL SETUP LABS IF REQUIRED.

https://www.eve-ng.net/index.php/documentation/howtos/howto-add-aruba-cx-switch/

TABLE OF CONTENTS

Lab Objective

This lab will enable the reader to gain hands on experience with OSPFv3 troubleshooting. This lab as shown in Figure 1 is preconfigured with 2 problems, you will use the troubleshooting flowchart to perform verification steps to identify and fix the problems.

Lab Overview

This lab as shown in Figure 1 will allow you to route between /128 Loopbacks on each switch via OSPFv3 after the 2 problems are identified and fixed.

/64 subnets are used between the switches.

Note: Importing EVE-NG lab will not import the configs, you will need to copy and paste the configs from the appendix into your switches before attempting this lab.

Lab Network Layout

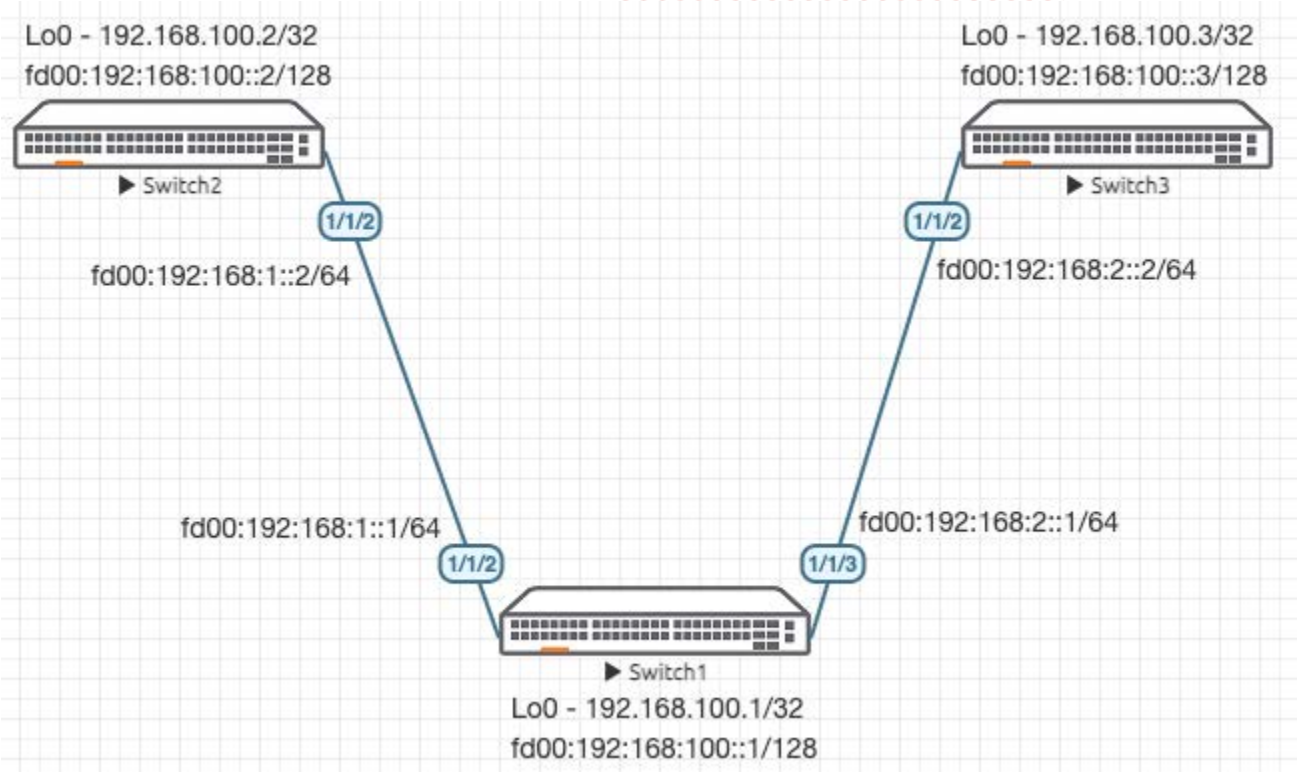

Figure 1. Lab topology and addresses

Lab Tasks

Task 1 – Lab setup

For this lab refer to Figure 1 for topology and IP address details.

- Start all the devices, including VPCS hosts
- Open each switch console and log in with user “admin” and hit enter, so that no password is applied
- Configs are not transferred in the .unl/.zip files, copy and paste in configs for all devices from the appendix section

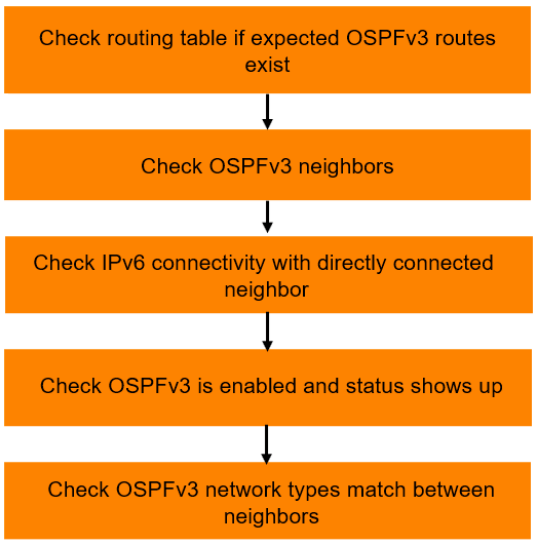

Task 2 – Check routing table if expected OSPFv3 routes exist

- Start with Switch1 (in the middle), this way, you can check if routes exist from both neighbors at the same time.

```
Switch1# sh ipv6 rou

Displaying ipv6 routes selected for forwarding

Origin Codes: C - connected, S - static, L - local
              R - RIP, B - BGP, O - OSPF
Type Codes:   E - External BGP, I - Internal BGP, V - VPN, EV - EVPN
              IA - OSPF internal area, E1 - OSPF external type 1
              E2 - OSPF external type 2

VRF: default

Prefix                  Nexthop               Interface     VRF(egress)       Origin/    Distance/    Age
                                                                              Type       Metric
-----------------------------------------------------------------------------------------------------------
fd00:192:168:1::/64     -                     1/1/2         -                 C          [0/0]        -
fd00:192:168:1::1/128   -                     1/1/2         -                 L          [0/0]        -
fd00:192:168:2::/64     -                     1/1/3         -                 C          [0/0]        -
fd00:192:168:2::1/128   -                     1/1/3         -                 L          [0/0]        -
fd00:192:168:100::1/128 -                     loopback0     -                 L          [0/0]        -

Total Route Count : 5
```

- Since only connected (C) and local (L) routes are seen, this means none of the expected OSPFv3 routes exist

Task 3 – Check OSPFv3 neighbors

- Check if OSPFv3 neighbors are up

```
Switch1# sh ipv6 ospfv3 nei
VRF : default                           Process : 1
====================================================

Total Number of Neighbors: 1

Neighbor ID      Priority  State             Interface
-------------------------------------------------------
192.168.100.3    1         FULL/DR           1/1/3
  Neighbor address fe80::800:901:812:8e9e
```

- You will see only 1 neighbor is up (Switch3 neighbor ID is shown but no routes are learnt, will revisit this issue later)
- Move onto next step to try to figure out why Switch2 neighbor is down

Task 4 – Check IPv6 connectivity with directly connected neighbor

- Check that IPv6 connectivity to Switch2 works as expected, good that it responds

```
Switch1# ping6 fd00:192:168:1::2
PING fd00:192:168:1::2(fd00:192:168:1::2) 100 data bytes
108 bytes from fd00:192:168:1::2: icmp_seq=1 ttl=64 time=2.42 ms
108 bytes from fd00:192:168:1::2: icmp_seq=2 ttl=64 time=2.08 ms
^C

--- fd00:192:168:1::2 ping statistics ---
2 packets transmitted, 2 received, 0% packet loss, time 1002ms
rtt min/avg/max/mdev = 2.080/2.250/2.421/0.170 ms
```

Task 4 – Check OSPFv3 is enabled and status shows up

- Check Switch1 1st, everything looks good here

```
Switch1# sh ipv6 ospfv3
VRF : default                          Process : 1
--------------------------------------------------

RouterID            : 192.168.100.1    OSPFv3                  : Enabled
BFD                 : Disabled         SPF Start Interval      : 200   ms
SPF Hold Interval   : 1000  ms         SPF Max Wait Interval   : 5000  ms
LSA Start Time      : 5000  ms         LSA Hold Time           : 0     ms
LSA Max Wait Time   : 0     ms         LSA Arrival             : 1000  ms
External LSAs       : 2                Checksum Sum            : 116599
ECMP                : 4                Reference Bandwidth     : 100000Mbps
Area Border         : false            AS Border               : true
GR Status           : Enabled          GR Interval             : 120
GR State            : inactive         GR Exit Status          : none
GR Helper           : Disabled         GR Strict LSA Check     : Disabled
GR Ignore Lost I/F  : Disabled
Summary address:

Area       Total     Active
-------------------------------
Normal      1         1
Stub        0         0
NSSA        0         0


Switch1# sh ipv6 ospfv3 int 1/1/2
Interface 1/1/2 is Up, Line Protocol is Up
-------------------------------------------
VRF                  : default                          Process              : 1
IPv6 address         : fe80::800:901:816:7b7e           Area                 : 0.0.0.0
Status               : Up                               Network Type         : Broadcast
Hello Interval       : 10                               Dead Interval        : 40
Transit Delay        : 1                                Retransmit Interval  : 5
BFD                  : Disabled                         Link Speed           : 1000 Mbps
Cost Configured      : NA                               Cost Calculated      : 100
State/Type           : DR                               Router Priority      : 1
DR                   : 192.168.100.1                    BDR                  : No
Link LSAs            : 1                                Checksum Sum         : 33136
```

- Check Switch2 next

```
Switch2# sh ipv6 ospfv3
VRF : default                          Process : 1
--------------------------------------------------

RouterID            : 0.0.0.0          OSPFv3                  : Enabled
BFD                 : Disabled         SPF Start Interval      : 200   ms
SPF Hold Interval   : 1000  ms         SPF Max Wait Interval   : 5000  ms
LSA Start Time      : 5000  ms         LSA Hold Time           : 0     ms
LSA Max Wait Time   : 0     ms         LSA Arrival             : 1000  ms
External LSAs       : 0                Checksum Sum            : 0
ECMP                : 4                Reference Bandwidth     : 100000Mbps
Area Border         : false            AS Border               : true
GR Status           : Enabled          GR Interval             : 120
GR State            : inactive         GR Exit Status          : none
GR Helper           : Disabled         GR Strict LSA Check     : Disabled
GR Ignore Lost I/F  : Disabled
```

```
Summary address:

Area       Total     Active
------------------------------
Normal      1         1
Stub        0         0
NSSA        0         0


Switch2# sh ipv6 ospfv3 int 1/1/2
Interface 1/1/2 is Up, Line Protocol is Up
--------------------------------------------
VRF                  : default                          Process                 : 1
IPv6 address         : fe80::800:901:88a:14fa           Area                    : 0.0.0.0
Status               : Down                             Network Type            : Broadcast
Hello Interval       : 10                               Dead Interval           : 40
Transit Delay        : 1                                Retransmit Interval     : 5
BFD                  : Disabled                         Link Speed              : 1000 Mbps
Cost Configured      : NA                               Cost Calculated         : 100
State/Type           : Down                             Router Priority         : 1
DR                   : No                               BDR                     : No
Link LSAs            : 0                                Checksum Sum            : 0
```

- You will notice that status is down and routerID is 0.0.0.0 (that is the problem)
- OSPFv3 requires a valid IPv4 routerID to function
- Add the required IPv4 address into Lo0 as shown in the diagram

```
Switch2# conf
Switch2(config)# int lo 0
Switch2(config-loopback-if)# ip add 192.168.100.2/32
```

- Check again

```
Switch2(config-loopback-if)# sh ipv6 ospfv3 int 1/1/2
Interface 1/1/2 is Up, Line Protocol is Up
--------------------------------------------
VRF                  : default                          Process                 : 1
IPv6 address         : fe80::800:901:88a:14fa           Area                    : 0.0.0.0
Status               : Up                               Network Type            : Broadcast
Hello Interval       : 10                               Dead Interval           : 40
Transit Delay        : 1                                Retransmit Interval     : 5
BFD                  : Disabled                         Link Speed              : 1000 Mbps
Cost Configured      : NA                               Cost Calculated         : 100
State/Type           : BDR                              Router Priority         : 1
DR                   : 192.168.100.1                    BDR                     : 192.168.100.2
Link LSAs            : 2                                Checksum Sum            : 85770


Switch2(config-loopback-if)# sh ipv6 ospfv3
VRF : default                          Process : 1
--------------------------------------------------

RouterID            : 192.168.100.2    OSPFv3                  : Enabled
BFD                 : Disabled         SPF Start Interval      : 200   ms
SPF Hold Interval   : 1000  ms         SPF Max Wait Interval   : 5000  ms
LSA Start Time      : 5000  ms         LSA Hold Time           : 0     ms
LSA Max Wait Time   : 0     ms         LSA Arrival             : 1000  ms
External LSAs       : 3                Checksum Sum            : 174643
ECMP                : 4                Reference Bandwidth     : 100000Mbps
Area Border         : false            AS Border               : true
GR Status           : Enabled          GR Interval             : 120
GR State            : inactive         GR Exit Status          : none
```

```
GR Helper          : Disabled         GR Strict LSA Check    : Disabled
GR Ignore Lost I/F : Disabled
Summary address:

Area      Total     Active
-------------------------------
Normal     1         1
Stub       0         0
NSSA       0         0



Switch2(config-loopback-if)# sh ipv6 ospfv3 nei
VRF : default                          Process : 1
=====================================================

Total Number of Neighbors: 1

Neighbor ID      Priority  State             Interface
-------------------------------------------------------
192.168.100.1    1         FULL/DR           1/1/2
  Neighbor address fe80::800:901:816:7b7e
```

- You should now see Switch1 /128 loopback learnt via OSPFv3

```
Switch2(config-loopback-if)# sh ipv6 rou

Displaying ipv6 routes selected for forwarding

Origin Codes: C - connected, S - static, L - local
              R - RIP, B - BGP, O - OSPF
Type Codes:   E - External BGP, I - Internal BGP, V - VPN, EV - EVPN
              IA - OSPF internal area, E1 - OSPF external type 1
              E2 - OSPF external type 2

VRF: default

Prefix                  Nexthop                    Interface     VRF(egress)    Origin/    Distance/    Age
                                                                                Type       Metric
-------------------------------------------------------------------------------------------------------------
fd00:192:168:1::/64     -                          1/1/2         -              C          [0/0]        -
fd00:192:168:1::2/128   -                          1/1/2         -              L          [0/0]        -
fd00:192:168:100::1/128  fe80::800:901:816:7b7e    1/1/2         -              O          [110/100]
00h:01m:55s
fd00:192:168:100::2/128  -                         loopback0     -              L          [0/0]        -

Total Route Count : 4
```

- And be able to ping it

```
Switch2(config-loopback-if)# ping6 fd00:192:168:100::1
PING fd00:192:168:100::1(fd00:192:168:100::1) 100 data bytes
108 bytes from fd00:192:168:100::1: icmp_seq=1 ttl=64 time=2.67 ms
108 bytes from fd00:192:168:100::1: icmp_seq=2 ttl=64 time=1.70 ms
```

Task 6 – Check OSPFv3 network types match between neighbors

- We now revisit the issue between Switch1 and Switch3, we saw that even though neighbors are up, no routes are learnt

```
Switch1# sh ipv6 ospfv3 int 1/1/3
Interface 1/1/3 is Up, Line Protocol is Up
```

```
-------------------------------------------
VRF                  : default                      Process              : 1
IPv6 address         : fe80::800:901:c16:7b7e       Area                 : 0.0.0.0
Status               : Up                           Network Type         : Broadcast
Hello Interval       : 10                           Dead Interval        : 40
Transit Delay        : 1                            Retransmit Interval  : 5
BFD                  : Disabled                     Link Speed           : 1000 Mbps
Cost Configured      : NA                           Cost Calculated      : 100
State/Type           : DR-other                     Router Priority      : 1
DR                   : 192.168.100.3                BDR                  : 192.168.100.3
Link LSAs            : 2                            Checksum Sum         : 19970
```

- Notice that Switch3 has OSPFv3 network type set to point-to-point

```
Switch3# sh ipv6 ospfv3 int 1/1/2
Interface 1/1/2 is Up, Line Protocol is Up
-------------------------------------------
VRF                  : default                      Process              : 1
IPv6 address         : fe80::800:901:812:8e9e       Area                 : 0.0.0.0
Status               : Up                           Network Type         : Point-to-point
Hello Interval       : 10                           Dead Interval        : 40
Transit Delay        : 1                            Retransmit Interval  : 5
BFD                  : Disabled                     Link Speed           : 1000 Mbps
Cost Configured      : NA                           Cost Calculated      : 100
State/Type           : Point-to-point               Router Priority      : n/a
DR                   : No                           BDR                  : No
Link LSAs            : 2                            Checksum Sum         : 19970
```

- Fix this by setting both sides to the same network type (we will use point-to-point between Switch1 and Switch3 in this case)

```
Switch1(config)# int 1/1/3
Switch1(config-if)# ipv6 ospfv3 network point-to-point
```

- You should now see the /128 loopback from Switch3 on Switch1

```
Switch1(config)# sh ipv6 route

Displaying ipv6 routes selected for forwarding

Origin Codes: C - connected, S - static, L - local
              R - RIP, B - BGP, O - OSPF
Type Codes:   E - External BGP, I - Internal BGP, V - VPN, EV - EVPN
              IA - OSPF internal area, E1 - OSPF external type 1
              E2 - OSPF external type 2

VRF: default

Prefix                  Nexthop                     Interface     VRF(egress)   Origin/    Distance/    Age
                                                                                Type       Metric
-----------------------------------------------------------------------------------------------------------
fd00:192:168:1::/64     -                           1/1/2         -             C          [0/0]        -
fd00:192:168:1::1/128   -                           1/1/2         -             L          [0/0]        -
fd00:192:168:2::/64     -                           1/1/3         -             C          [0/0]        -
fd00:192:168:2::1/128   -                           1/1/3         -             L          [0/0]        -
fd00:192:168:100::1/128  -                          loopback0     -             L          [0/0]        -
fd00:192:168:100::2/128  fe80::800:901:88a:14fa     1/1/2         -             O          [110/100]
00h:21m:16s
fd00:192:168:100::3/128  fe80::800:901:812:8e9e     1/1/3         -             O          [110/100]
00h:01m:31s

Total Route Count : 7
```

- And be able to ping it

```
Switch1(config)# ping6 fd00:192:168:100::3
PING fd00:192:168:100::3(fd00:192:168:100::3) 100 data bytes
108 bytes from fd00:192:168:100::3: icmp_seq=1 ttl=64 time=1.86 ms
108 bytes from fd00:192:168:100::3: icmp_seq=2 ttl=64 time=4.18 ms
```

Appendix – Complete Configurations

- Configs with problems are provided below

Switch1

```
!Version ArubaOS-CX Virtual.10.07.0010
!export-password: default
hostname Switch1
led locator on
ntp server pool.ntp.org minpoll 4 maxpoll 4 iburst
ntp enable
!
!
!
!
!
!
ssh server vrf mgmt
vlan 1
interface mgmt
    no shutdown
    ip dhcp
interface 1/1/1
    no shutdown
interface 1/1/2
    no shutdown
    ipv6 address fd00:192:168:1::1/64
    ipv6 ospfv3 1 area 0.0.0.0
interface 1/1/3
    no shutdown
    ipv6 address fd00:192:168:2::1/64
    ipv6 ospfv3 1 area 0.0.0.0
interface 1/1/4
    no shutdown
interface 1/1/5
    no shutdown
interface 1/1/6
    no shutdown
interface loopback 0
    ip address 192.168.100.1/32
    ipv6 address fd00:192:168:100::1/128
    ipv6 ospfv3 1 area 0.0.0.0
!
!
!
!
!
router ospfv3 1
    redistribute local loopback
    area 0.0.0.0
https-server vrf mgmt
```

Switch2

```
!Version ArubaOS-CX Virtual.10.07.0010
!export-password: default
hostname Switch2
led locator on
ntp server pool.ntp.org minpoll 4 maxpoll 4 iburst
ntp enable
!
!
!
!
!
!
ssh server vrf mgmt
vlan 1
interface mgmt
    no shutdown
    ip dhcp
interface 1/1/1
    no shutdown
interface 1/1/2
    no shutdown
    ipv6 address fd00:192:168:1::2/64
    ipv6 ospfv3 1 area 0.0.0.0
interface 1/1/3
    no shutdown
interface 1/1/4
    no shutdown
interface 1/1/5
    no shutdown
interface 1/1/6
    no shutdown
interface loopback 0
    ipv6 address fd00:192:168:100::2/128
    ipv6 ospfv3 1 area 0.0.0.0
!
!
!
!
!
router ospfv3 1
    redistribute local loopback
    area 0.0.0.0
https-server vrf mgmt
```

Switch3

```
!Version ArubaOS-CX Virtual.10.07.0010
!export-password: default
hostname Switch3
led locator on
ntp server pool.ntp.org minpoll 4 maxpoll 4 iburst
ntp enable
!
!
!
!
!
!
ssh server vrf mgmt
vlan 1
interface mgmt
```

```
    no shutdown
    ip dhcp
interface 1/1/1
    no shutdown
interface 1/1/2
    no shutdown
    ipv6 address fd00:192:168:2::2/64
    ipv6 ospfv3 1 area 0.0.0.0
    ipv6 ospfv3 network point-to-point
interface 1/1/3
    no shutdown
interface 1/1/4
    no shutdown
interface 1/1/5
    no shutdown
interface 1/1/6
    no shutdown
interface loopback 0
    ip address 192.168.100.3/32
    ipv6 address fd00:192:168:100::3/128
    ipv6 ospfv3 1 area 0.0.0.0
!
!
!
!
!
router ospfv3 1
    redistribute local loopback
    area 0.0.0.0
https-server vrf mgmt
```

a Hewlett Packard
Enterprise company

www.arubanetworks.com

3333 Scott Blvd. Santa Clara, CA 95054
1.844.472.2782 | T: 1.408.227.4500 | FAX: 1.408.227.4550 | info@arubanetworks.com