Hewlett Packard Enterprise

HPE aruba networking

AOS-CX 10.13 Update: VxLAN Services

Steven Baker – Technical Marketing Engineer

Dec, 2023

Session Agenda

1	Ping v4/Ping v6 and Traceroute v4/v6 in VxLAN Fabric Overlay with IPv6 Underlay
2	TFTP support for VXLAN IPv6 Overlay

AOS-CX 10.13 Update: Ping4/Ping6/Traceroute4/Traceroute6 in VxLAN Fabric Overlay with IPv6 Underlay (10.12.1000)

Ping4/Ping6/Traceroute4/Traceroute6 in VxLAN Fabric Overlay with IPv6 Underlay

- The HPE Networking CX product line code has been updated to now support the ability to leverage **Ping4/Ping6/Traceroute4/Traceroute6 in a VxLAN Fabric Overlay with an IPv6 Underlay**.
  - Supported platforms (other platforms will be worked on for future release with 10.14):

Ping4/Ping6/Traceroute4/Traceroute6 in VxLAN Fabric Overlay with IPv6 Underlay	OVA	4100	6000	6100	6200	6300	6400 (v1/v2)	8100	8320	8325	8360 (v1/v2)	8400	9300	10000
Platform Support	No	No	No	No	No	**Yes**	**Yes**	No	No	No	**Yes**	No	No	No

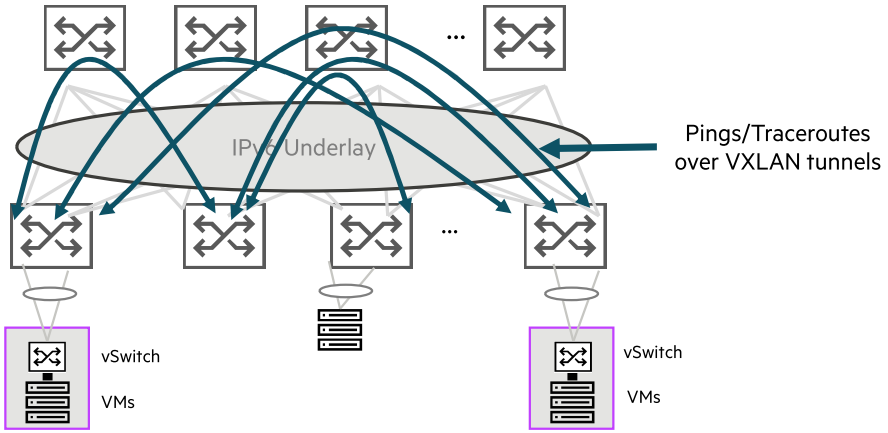

Ping Demo

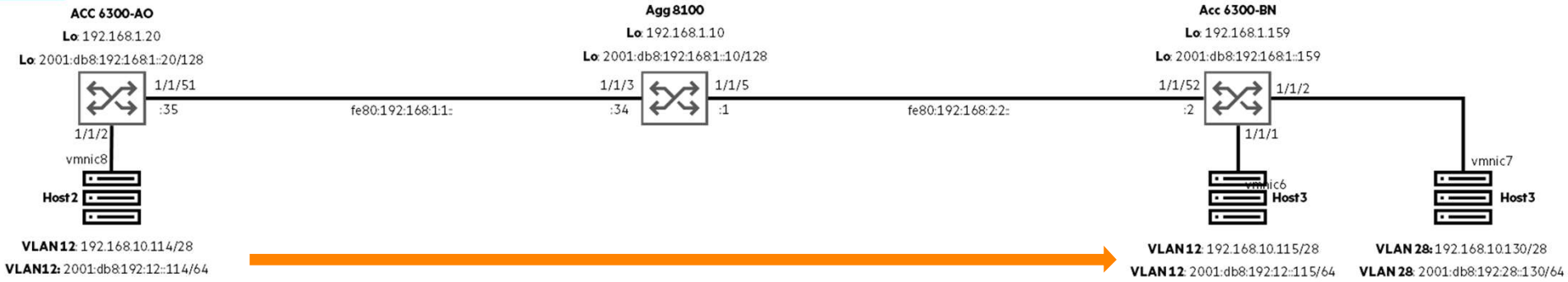
ACC 6300-AO
Lo: 192.168.1.20
Lo: 2001:db8:192:168:1::20/128
1/1/51
:35
1/1/2
vmnic8
Host 2
VLAN 12: 192.168.10.114/28
VLAN12: 2001:db8:192:12::114/64
fe80:192:168:1:1::
Agg 8100
Lo: 192.168.1.10
Lo: 2001:db8:192:168:1::10/128
1/1/3
:34
1/1/5
:1
fe80:192:168:2:2::
Acc 6300-BN
Lo: 192.168.1.159
Lo: 2001:db8:192:168:1::159
1/1/52
:2
1/1/2
1/1/1
vmnic6
Host3
vmnic7
Host3
VLAN 12: 192.168.10.115/28
VLAN 12: 2001:db8:192:12::115/64
VLAN 28: 192.168.10.130/28
VLAN 28: 2001:db8:192:28::130/64

Command Prompt
C:\Users\Admin>

Traceroute Example

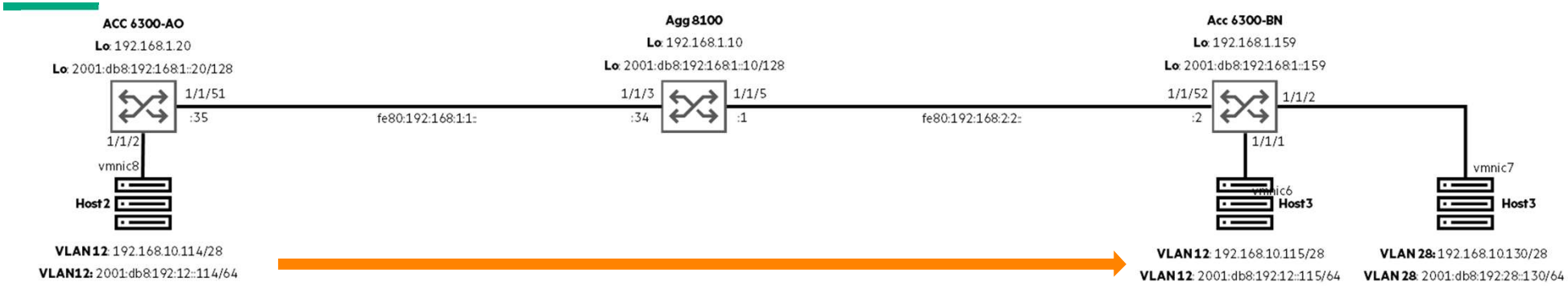


```
Bldg4-Acc-6300M-A0(config)# traceroute6 2001:db8:192:168:1::159 source 2001:db8:192:168:1::20
traceroute to 2001:db8:192:168:1::159 (2001:db8:192:168:1::159) from 2001:db8:192:168:1::20, 30 hops
max, 3 sec. timeout, 3 probes, 24 byte packets
 1  2001:db8:192:168:1::10 (2001:db8:192:168:1::10)  0.2695 ms  0.2562 ms  0.1119 ms
 2  2001:db8:192:168:1::159 (2001:db8:192:168:1::159)  0.1716 ms  0.4123 ms  0.1713 ms
```

AOS-CX 10.13 Update:
TFTP support for VXLAN IPv6 Overlay
(10.12.1000)

TFTP Support for VXLAN IPv6 Overlay

- The HPE Networking CX product line code has been updated to now support the ability to leverage **TFTP in an IPv6 VxLAN Fabric Overlay**.
- This is standalone feature which can be run in any VRF. There is no requirement for inter-vrf with this feature through configuration.
  - Supported platforms (other platforms will be worked on for future release 10.14):

Ping4/Ping6 in VxLAN Fabric Overlay with IPv6 Underlay	OVA	4100	6000	6100	6200	6300	6400 (v1/v2)	8100	8320	8325	8360 (v1/v2)	8400	9300	10000
Platform Support	No	No	No	No	No	**Yes**	**Yes**	No	No	No	**Yes**	No	No	No

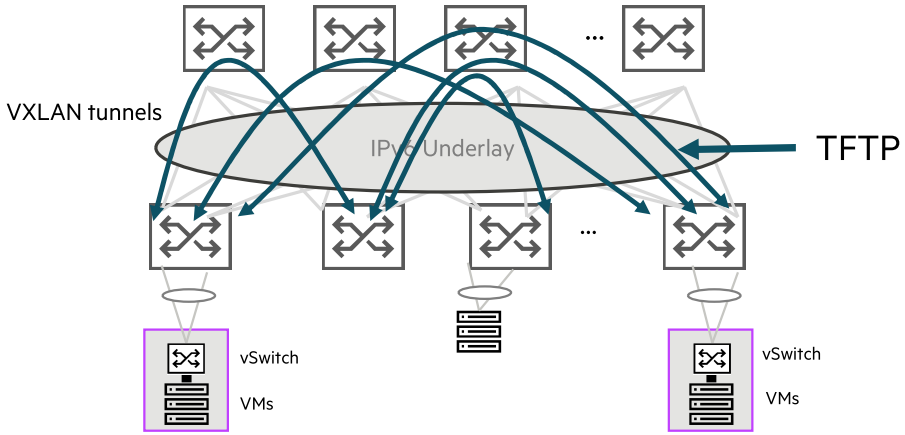

Thank you

aruba_switching_tme@hpe.com

© 2023 Hewlett Packard Enterprise Development LP