Hewlett Packard Enterprise

HPE aruba networking

AOS-CX 10.13 Update: Symmetric IRB on AOS-CX Simulator

Priyadarshini Senthilkumar, Technical Marketing Engineer

Nov 9th, 2023

Agenda

1	Overview
2	Use Cases
3	Details
4	Configuration
5	Troubleshooting
6	Demo

Overview

CX Simulator - Before 10.13

Only L2 VXLAN was supported.

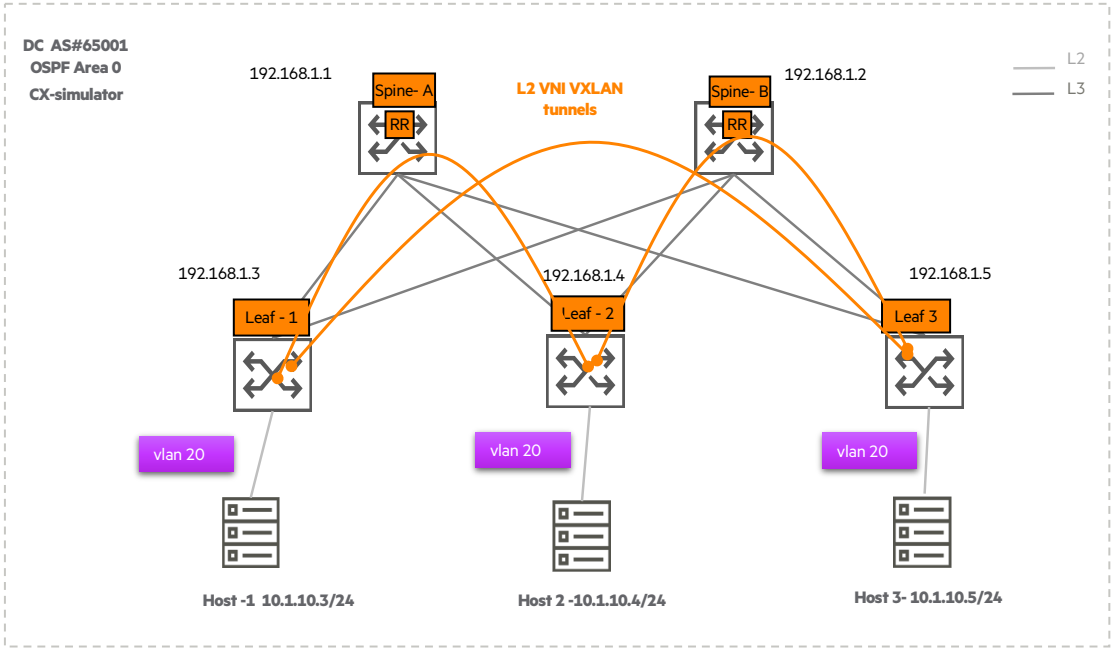

Symmetric IRB – Overview & What is it ?

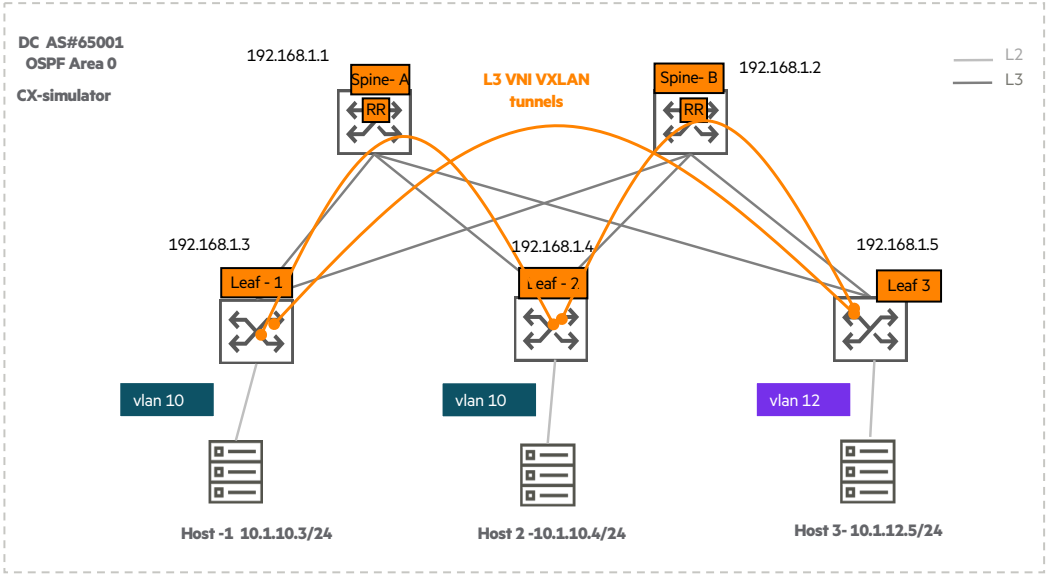

VTEP – Virtual Tunneling Endpoint

VNI – Virtual network Identifier

- Symmetric Integrated Routing and Bridging enables routing for traffic between different VLANs.
- Routing on the ingress and egress VTEPs
- Bi-directional traffic uses symmetric L3 VNI
- VTEPs do not need to hold unnecessary ARP/MACs
- Destination VLAN/VNI does not have to be configured on source VTEP

CX Simulator – From 10.13

- A L3VNI is used to route between VTEP's
- The ingress and egress VTEP performs routing
- Each L3VNI is associated to a user created VRF.
- Distributed L3 Gateways can be deployed across the overlay network to optimize L2/L3 network connectivity

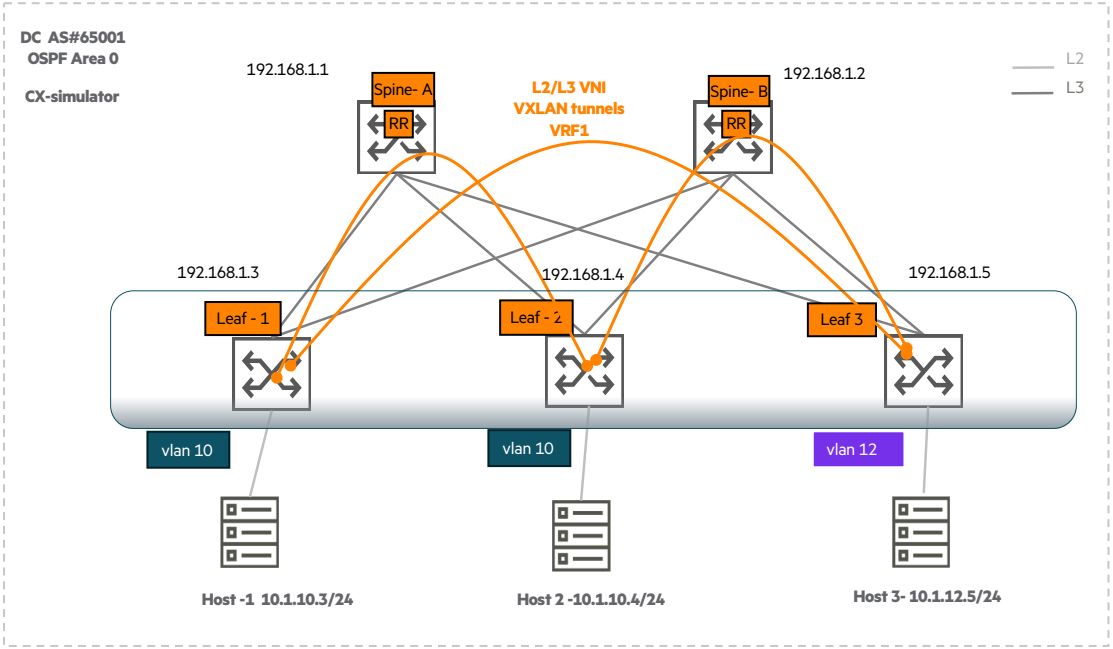

How will this help ?

Symmetric IRB enhances the simulator's ability to model complex network environments, making it a valuable resource for test more versatile and integrated network configurations.

Use Cases

Use Cases

- Minimize hardware requirements and to learn, test and validate
- Deploy in vSphere or EVE-NG

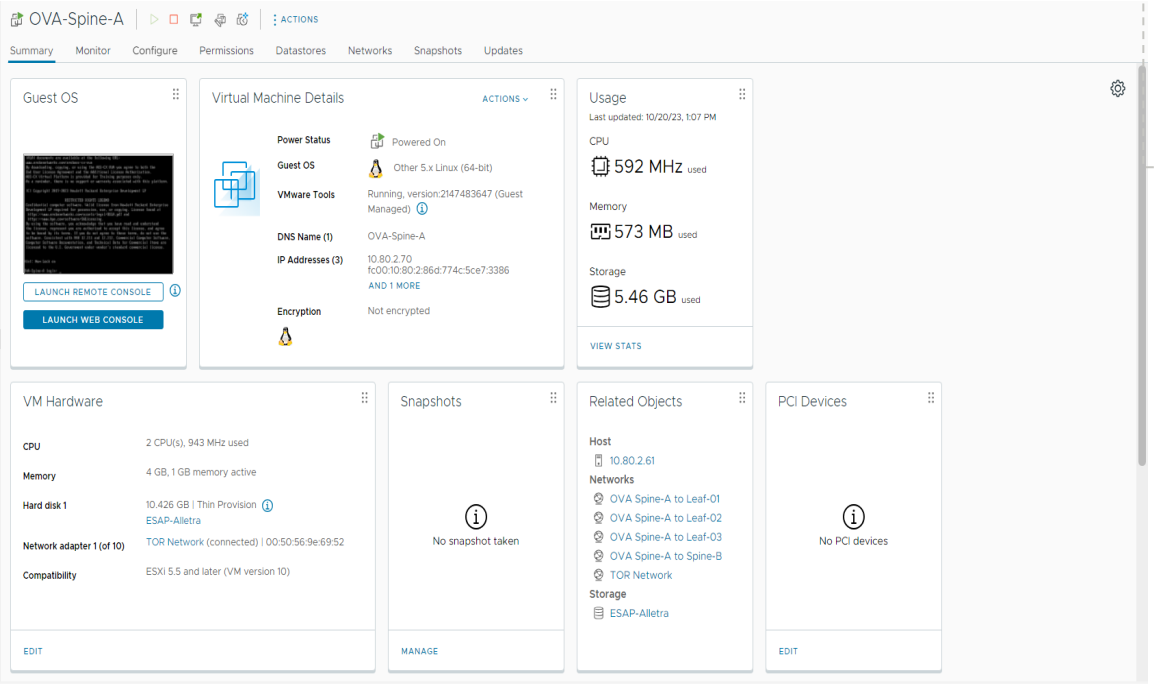

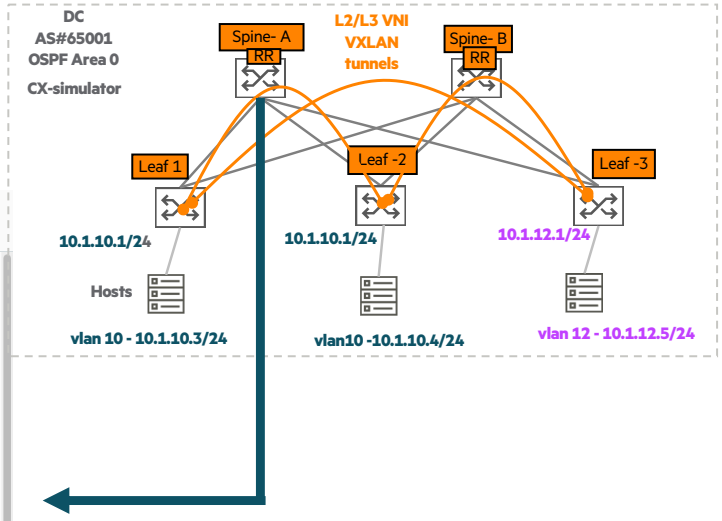

Details and Caveats

Details

- Both IPV4 and IPV6 are supported on distributed gateways in CX-simulators.
- Default VRF cannot be attached to a L3VNI
- Active gateway MACs should be the same across all VTEP's in CX-simulators.

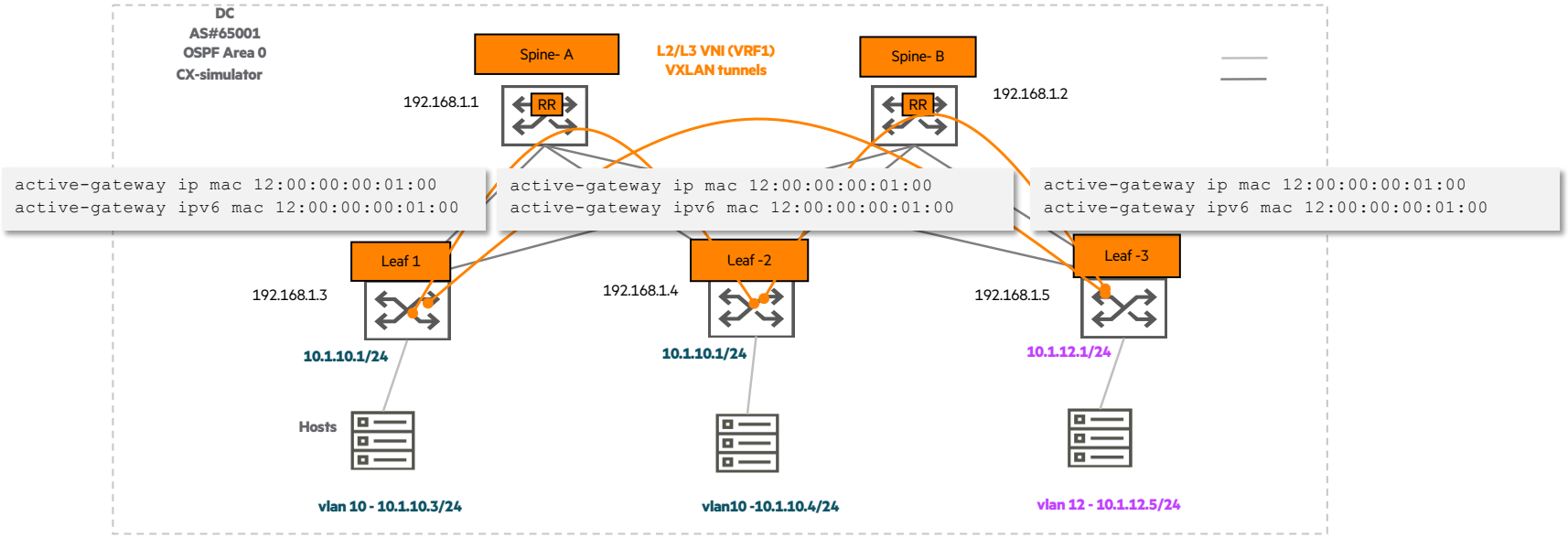

Details

- Virtual MACs are required for symmetric IRB for CX hardware switches, but this is not required on CX-Simulators `virtual-mac 02:00:00:00:01:00`
- CPU generated traffic does not get encapsulated in Symmetric IRB on AOS-CX simulators

  -Active Gateway IPs are not reachable from Remote VTEP's and hosts.
- For e.g., ping from VTEP1 to Gateway of VTEP2 or

  ping from Host1 (connected to VTEP1) to gateway of VTEP2

Ping fails in the above scenario since ping packets here are CPU generated.

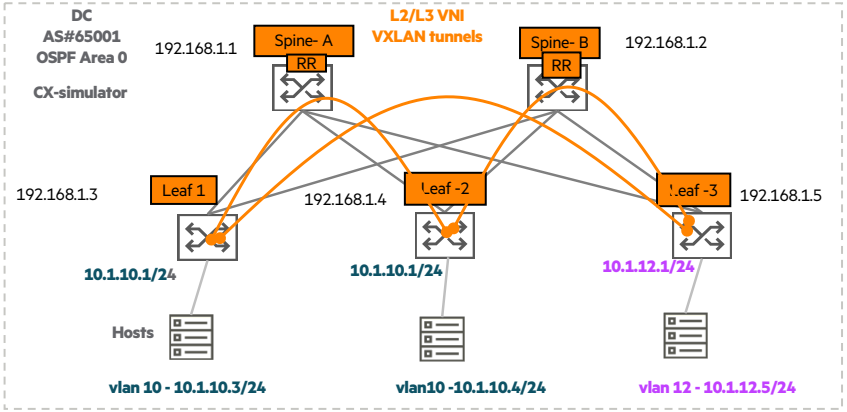

Configuration

Configuration

Spine - A

```
interface 1/1/1
    description Downlink to OVA-Leaf-01
    no shutdown
    mtu 9198
    ip mtu 9198
    ip address 192.168.3.0/31
    ip ospf 1 area 0.0.0.0
    ip ospf network point-to-point
interface 1/1/2
    description Downlink to OVA-Leaf-02
    no shutdown
    mtu 9198
    ip mtu 9198
    ip address 192.168.3.2/31
    ip ospf 1 area 0.0.0.0
    ip ospf network point-to-point
interface 1/1/3
    description Downlink to OVA-Leaf-03
    no shutdown
    mtu 9198
    ip mtu 9198
    ip address 192.168.3.4/31
    ip ospf 1 area 0.0.0.0
    ip ospf network point-to-point
interface 1/1/4
    ip ospf network point-to-point
```

```
interface loopback 0
    ip address 192.168.1.1/32
    ip ospf 1 area 0.0.0.0
!
!
!
router ospf 1
    router-id 192.168.1.1
    area 0.0.0.0
router bgp 65001
    bgp router-id 192.168.1.1
    neighbor leaf peer-group
    neighbor leaf remote-as 65001
    neighbor leaf description leaf RR clients
    neighbor leaf update-source loopback 0
    neighbor 192.168.1.3 peer-group leaf
    neighbor 192.168.1.4 peer-group leaf
    neighbor 192.168.1.5 peer-group leaf

    address-family l2vpn evpn
        neighbor leaf route-reflector-client
        neighbor leaf send-community extended
        neighbor 192.168.1.3 activate
        neighbor 192.168.1.4 activate
        neighbor 192.168.1.5 activate
    exit-address-family
```

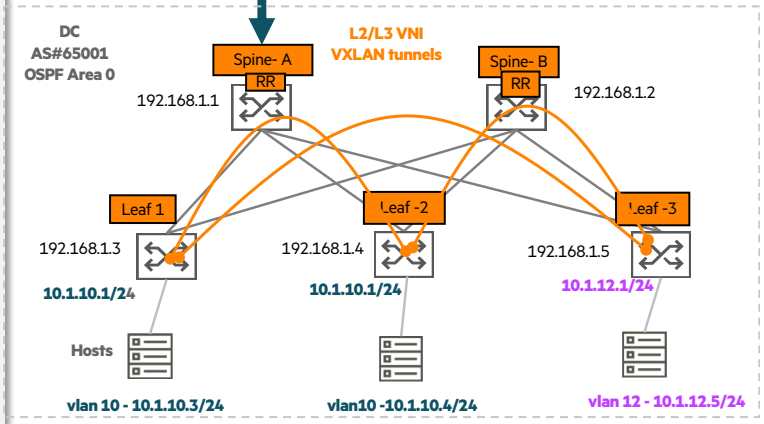

Configuration

Spine - B

```
interface 1/1/1
    description ova Leaf-1
no shutdown
    mtu 9198
    ip mtu 9198
    ip address 192.168.3.8/31
    ip ospf 1 area 0.0.0.0
    ip ospf network point-to-point
interface 1/1/2
    description ova Leaf-2
    no shutdown
    ip mtu 9198
    ip address 192.168.3.10/31
    ip ospf 1 area 0.0.0.0
    ip ospf network point-to-point
interface 1/1/3
    description ova Leaf-3
    no shutdown
    ip mtu 9198
    ip address 192.168.3.12/31
    ip ospf 1 area 0.0.0.0
    ip ospf network point-to-point
interface loopback 0
    ip address 192.168.1.2/32
    ip ospf 1 area 0.0.0.0
```

```
!

!
!
!
!
router ospf 1
    router-id 192.168.1.2
    area 0.0.0.0
router bgp 65001
    bgp router-id 192.168.1.2
    neighbor leaf peer-group
    neighbor leaf remote-as 65001
    neighbor leaf description Leaf RR clients
    neighbor leaf update-source loopback 0
    neighbor 192.168.1.3 peer-group leaf
    neighbor 192.168.1.4 peer-group leaf
    neighbor 192.168.1.5 peer-group leaf
    address-family l2vpn evpn
        neighbor leaf route-reflector-client
        neighbor leaf send-community extended
        neighbor 192.168.1.3 activate
        neighbor 192.168.1.4 activate
        neighbor 192.168.1.5 activate
    exit-address-family
```

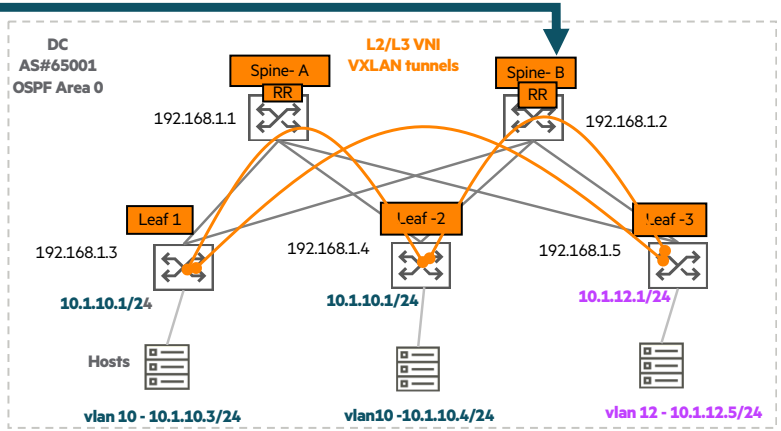

Configuration

Leaf -1 (VTEP-1)

```
evpn
    vlan 10
        rd auto
        route-target export auto
        route-target import auto
        redistribute host-route
interface vlan 10
    vrf attach VRF1
    ip address 10.1.10.1/24
    active-gateway ip mac 12:00:00:00:01:00
    active-gateway ip 10.1.10.1
    ipv6 address 1010::1/64
    active-gateway ipv6 mac 12:00:00:00:01:00
    active-gateway ipv6 1010::1
interface vxlan 1
    source ip 192.168.1.3
    no shutdown
    vni 10010
        vlan 10
    vni 100001
        vrf VRF1
        routing
!
!
!
!
router ospf 1
    area
0.0.0.0
```

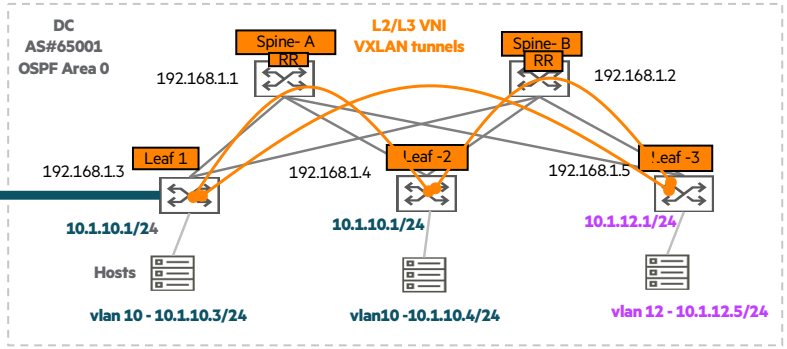


```
    router bgp 65001
    bgp router-id 192.168.1.3
    neighbor spine-RR peer-group
    neighbor spine-RR remote-as 65001
    neighbor spine-RR description Spine and RR peer-group
    neighbor spine-RR update-source loopback 0

neighbor 192.168.1.1 peer-group spine-RR
    neighbor 192.168.1.2 peer-group spine-RR
    address-family l2vpn evpn
        neighbor spine-RR send-community extended
        neighbor 192.168.1.1 activate
        neighbor 192.168.1.2 activate
    exit-address-family
!
    vrf VRF1
        address-family ipv4 unicast
            redistribute connected
            redistribute local loopback
        exit-address-family
        address-family ipv6 unicast
            redistribute connected
        exit-address-family
```

Configuration

Leaf -2 (VTEP-2)

```
evpn
    vlan 10
        rd auto
        route-target export auto
        route-target import auto
        redistribute host-route
interface vlan 10
    vrf attach VRF1
    ip address 10.1.10.1/24
    active-gateway ip mac 12:00:00:00:01:00
    active-gateway ip 10.1.10.1
    ipv6 address 1010::1/64
    active-gateway ipv6 mac 12:00:00:00:01:00
    active-gateway ipv6 1010::1
interface vxlan 1
    source ip 192.168.1.4
    no shutdown
    vni 10010
        vlan 10
    vni 100001
        vrf VRF1
        routing
!
!
!
!
!
```

```
 router ospf 1
    router-id 192.168.1.4
    area 0.0.0.0

router bgp 65001
    bgp router-id 192.168.1.4
    neighbor spine-RR peer-group
    neighbor spine-RR remote-as 65001
    neighbor spine-RR description Spine and RR peer-group
    neighbor spine-RR update-source loopback 0
    neighbor 192.168.1.1 peer-group spine-RR
    neighbor 192.168.1.2 peer-group spine-RR
    address-family l2vpn evpn
        neighbor spine-RR send-community extended
        neighbor 192.168.1.1 activate
        neighbor 192.168.1.2 activate
    exit-address-family
!
    vrf VRF1
        address-family ipv4 unicast
            redistribute connected
            redistribute local loopback
        exit-address-family
        address-family ipv6 unicast
            redistribute connected
        exit-address-family
```

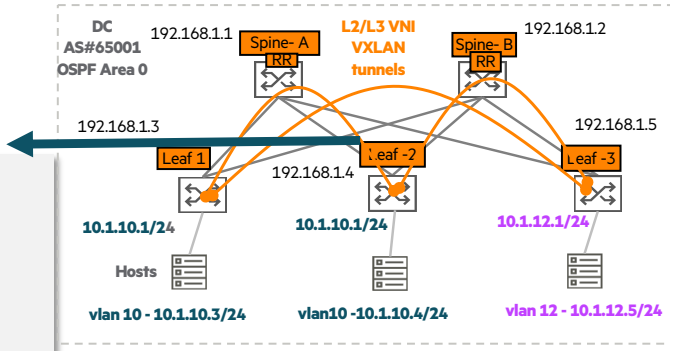

Configuration

Leaf -3(VTEP -3)

```
evpn
    vlan 10
        rd auto
        route-target export auto
        route-target import auto
        redistribute host-route
    vlan 12
        rd auto
        route-target export auto
        route-target import auto
        redistribute host-route
interface vlan 12
    vrf attach VRF1
    ip address 10.1.12.1/24
    active-gateway ip mac 12:00:00:00:01:00
    active-gateway ip 10.1.12.1
    ipv6 address 2008::10/64
    active-gateway ipv6 mac 12:00:00:00:01:00
    active-gateway ipv6 2008::12
interface vxlan 1
    source ip 192.168.1.5
    no shutdown
    vni 100001
        vrf VRF1
        routing
!
!
```

```
router ospf 1
    router-id 192.168.1.5
    area 0.0.0.0
router bgp 65001
    bgp router-id 192.168.1.5
    neighbor spine-RR peer-group
    neighbor spine-RR remote-as 65001
    neighbor spine-RR description Spine and RRpeer-group
    neighbor spine-RR update-source loopback 0
    neighbor 192.168.1.1 peer-group spine-RR
    neighbor 192.168.1.2 peer-group spine-RR
    address-family l2vpn evpn
        neighbor spine-RR send-community extended
        neighbor 192.168.1.1 activate
        neighbor 192.168.1.2 activate
    exit-address-family
!
    vrf VRF1
        address-family ipv4 unicast
            redistribute connected
            redistribute local loopback
        exit-address-family
        address-family ipv6 unicast
          redistribute connected
        exit-address-family
!
```

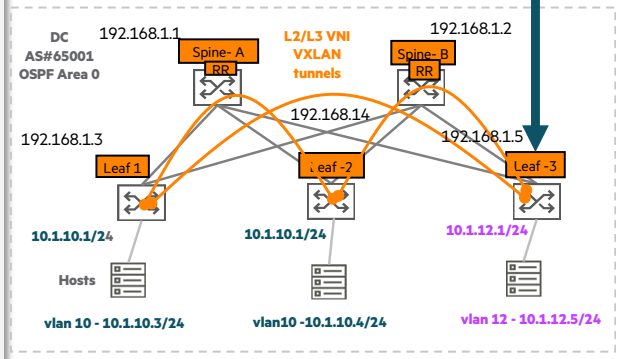

Troubleshooting

Troubleshooting

- To view the BGP L2VPN information.

```
OVA-Leaf-01# show bgp l2vpn evpn
EVPN Route-Type 2 prefix: [2]:[ESI]:[EthTag]:[MAC]:[OrigIP]
EVPN Route-Type 3 prefix: [3]:[EthTag]:[OrigIP]
EVPN Route-Type 5 prefix: [5]:[ESI]:[EthTag]:[IPAddrLen]:[IPAddr]
VRF : default
Local Router-ID 192.168.1.3


     Network                                          Nexthop                                Metric     LocPrf    Weight   Path
-------------------------------------------------------------------------------------------------------------------------------------
Route Distinguisher: 192.168.1.3:10       (L2VNI 10010)
*>  [2]:[0]:[0]:[00:50:56:9e:f0:5f]:[10.1.10.3]            192.168.1.3                            0          100        0       ?
*>  [2]:[0]:[0]:[00:50:56:9e:f0:5f]:[1010::10]             192.168.1.3                            0          100        0       ?
*>  [2]:[0]:[0]:[00:50:56:9e:f0:5f]:[]                     192.168.1.3                            0          100        0       ?
*>  [2]:[0]:[0]:[00:50:56:9e:f0:5f]:[fe80::2511:473f:5e1f:1dab]
                                                           192.168.1.3                            0          100        0       ?
*>  [2]:[0]:[0]:[12:00:00:00:01:00]:[10.1.10.1]            192.168.1.3                            0          100        0       ?
*>  [2]:[0]:[0]:[12:00:00:00:01:00]:[1010::4]              192.168.1.3                            0          100        0       ?
*>  [3]:[0]:[192.168.1.3]                                  192.168.1.3                            0          100        0       ?

Route Distinguisher: 65001:3              (L3VNI 100001)
*>i [5]:[0]:[0]:[24]:[10.1.12.0]                           192.168.1.5                            0          100        0       ?
* i [5]:[0]:[0]:[24]:[10.1.12.0]                           192.168.1.5                            0          100        0       ?
*>i [5]:[0]:[0]:[64]:[2008::]                              192.168.1.5                            0          100        0       ?
* i [5]:[0]:[0]:[64]:[2008::]                              192.168.1.5                            0          100        0       ?
Total number of entries 47
```

Troubleshooting

- To view the L3 VNI details

```
OVA-Leaf-01(config)#   show evpn vtep-neighbor all-vrfs
VTEP-IP                                L3VNI    MAC               VRF                                State
-----------------------------------------------------------------------------------------------------------
192.168.1.5                            100001   08:00:09:48:f5:59 VRF1                               Up
192.168.1.4                            100001   08:00:09:42:0d:df VRF1                               Up
```

- To view the detailed information for all EVPN instances.

```
OVA-Leaf-01(config)# show evpn evi detail

L2VNI : 10010
    Route Distinguisher        : 192.168.1.3:10
    VLAN                       : 10
    Status                     : up
    RT Import                  : 65001:268445467
    RT Export                  : 65001:268445467
    Local MACs                 : 1
    Remote MACs                : 0
    Peer VTEPs                 : 1


    Peer-VTEP-Address                          Remote-MACs
    ---------------------------------------------------------
    192.168.1.4                                 0
```

```
L3VNI : 100001
    Route Distinguisher        : 65001:1
    VRF                        : VRF1
    Status                     : up
    RT Import                  : 65001:1
    RT Export                  : 65001:1
    Local Type-5 Routes        : 2
    Remote Type-5 Routes       : 8
    Peer VTEPs                 : 2


    Peer-VTEP-Address                          Remote-Routes
    ---------------------------------------------------------
    192.168.1.4                                  6
    192.168.1.5                                  2
```

Troubleshooting

show arp all - displays information about ARP entries, including the IP address, MAC address, port, and state.

```
OVA-Leaf-01(config)# show arp all


IPv4 Address     MAC                Port         Physical
Port                                     State      VRF
-------------------------------------------------------------------------------------------------------------------------------
----
10.1.10.3        00:50:56:9e:f0:5f  vlan10       1/1/3                                                reachable  VRF1

192.168.3.0      08:00:09:84:86:84  1/1/1        1/1/1                                                reachable  default

192.168.3.8      08:00:09:cf:6e:16  1/1/2        1/1/2                                                reachable  default

10.1.10.4        00:50:56:9e:bb:6d  vlan10       vxlan1(192.168.1.4)                                  permanent  VRF1
```

```
OVA-Leaf-02# show arp all


IPv4 Address     MAC                Port         Physical
Port                                     State      VRF
-------------------------------------------------------------------------------------------------------------------------------
---
192.168.3.2      08:00:09:b5:79:22  1/1/1        1/1/1                                                reachable  default

192.168.3.10     08:00:09:4a:33:55  1/1/2        1/1/2                                                reachable  default

10.1.10.4        00:50:56:9e:bb:6d  vlan10       1/1/3                                                reachable  VRF1

10.1.10.3        00:50:56:9e:f0:5f  vlan10       vxlan1(192.168.1.3)                                  permanent  VRF1
```

Demo

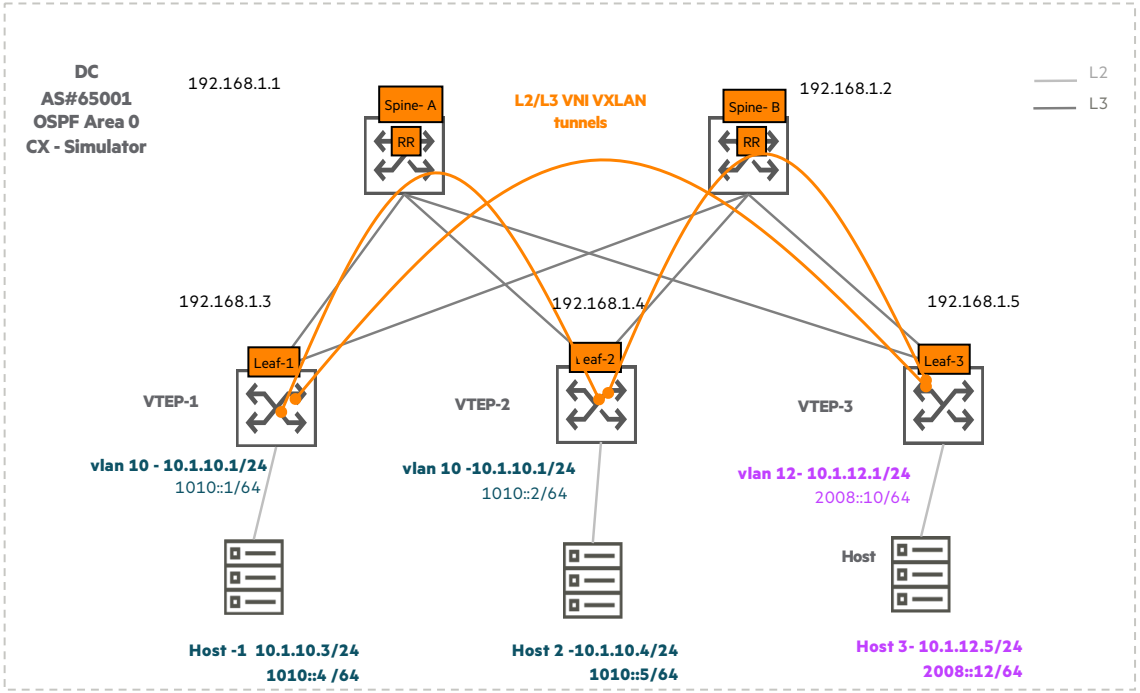
DC
AS#65001
OSPF Area 0
CX - Simulator
192.168.1.1
Spine- A
RR
L2/L3 VNI VXLAN
tunnels
Spine- B
RR
192.168.1.2
L2
L3
192.168.1.3
192.168.1.4
192.168.1.5
Leaf-1
Leaf-2
Leaf-3
VTEP-1
VTEP-2
VTEP-3
vlan 10 - 10.1.10.1/24
1010::1/64
vlan 10 -10.1.10.1/24
1010::2/64
vlan 12- 10.1.12.1/24
2008::10/64
Host
Host -1 10.1.10.3/24
1010::4 /64
Host 2 -10.1.10.4/24
1010::5/64
Host 3- 10.1.12.5/24
2008::12/64

Thank you

aruba_switching_tme@hpe.com

© 2023 Hewlett Packard Enterprise Development LP